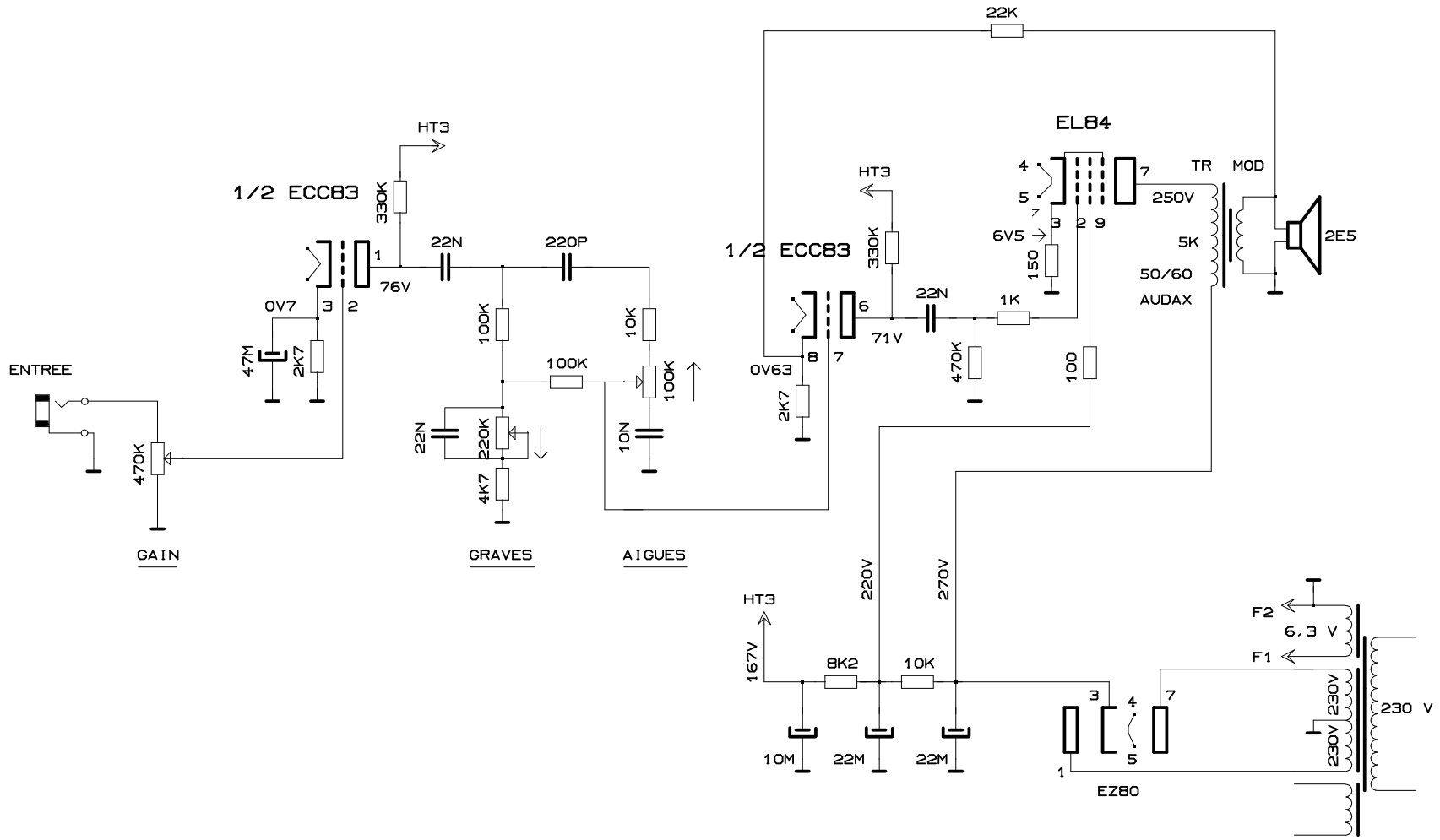

AMPLI PERELEC 5 WATTS

	SEPELLIERE44
	25/10/09